Abluetech PTR9818

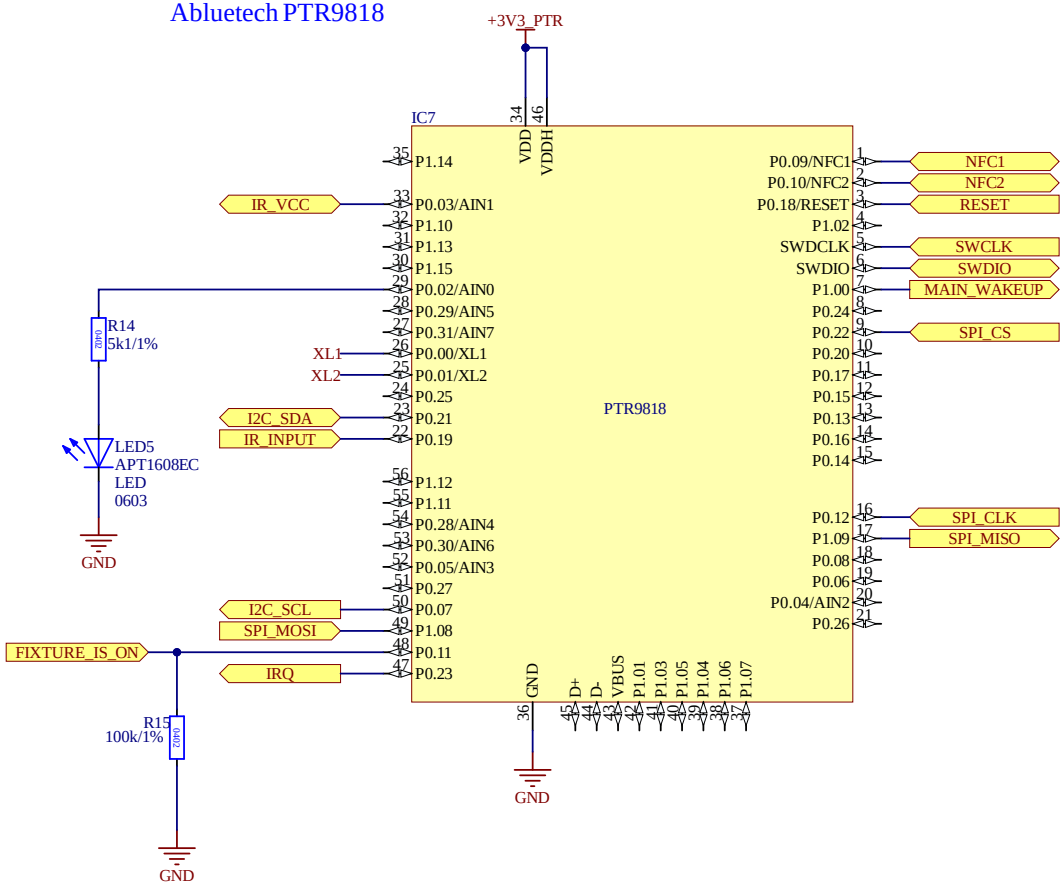

Power Supply

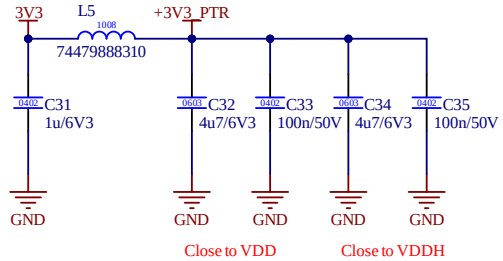

Clock Crystal

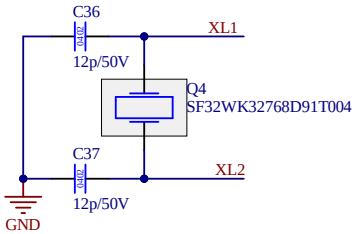

Project	Vision_External_Module	Revision	1.0
Board	Mainboard Vision_MCU_Schematic_Abluetech_PTR9818.SchDoc		
Date	3/15/2025	Sheet 7 of 8	
Variant	[No Variations]	Drawn by JK	