Example Power Supply 5V

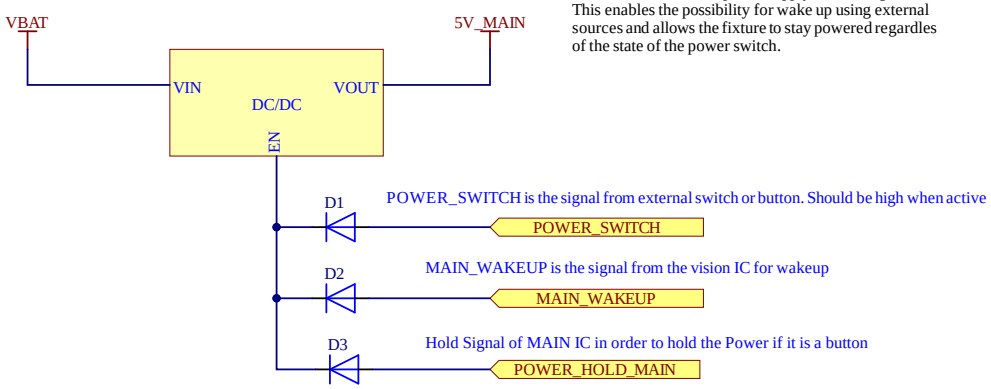

Enable and disable the power supply for the Logic.
This enables the possibility for wake up using external sources and allows the fixture to stay powered regardles of the state of the power switch.

Power Switch for Actuators like LED, Motor, ..

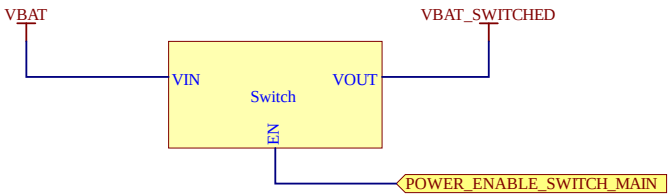

Enable and disable the power supply for the actuators by the main controller.
For example for the antitheft mode to still light up even if the power switch is turned off

Example Main IC

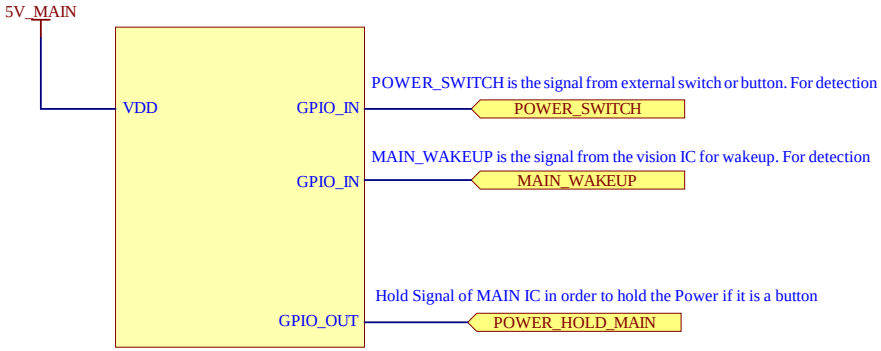

Power Supply VISION Controller

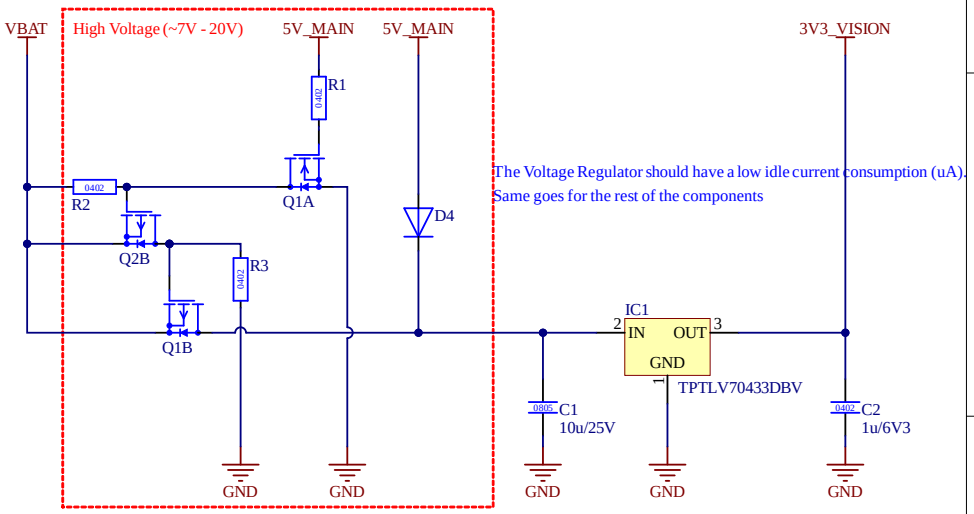

To ensure all features of the VISION IC remain functional, it needs to stay powered continuously.
This schematic provides an simple solution for powering the VISION IC, even with supply voltages as high as 20V. (Limited thorugh the Gate Voltage of the PMOS)
If the supply voltage itself is close to 5V, you can connect it directly to the linear regulator without the parts in the red box.
(The schematic in the red box is designed to minimize the power dissipation of the regulator.)

The VISION IC enters sleep mode when the fixture does not trigger the "FIXTURE_IS_ON" pin

Comment	Description	Designator	Footprint	LibRef	Quantity